SCHEMATICS

eOne MF

Electric Metering Pumps

Smaller Capacity Pumps

Version	Flow Rate		PART #
0110	0.26 GPH	1 LPH	**PEU483891MEA**
0216	0.53 GPH	2 LPH	**PEU483911MEA**
0420	1.06 GPH	4 LPH	**PEU483921MEA**
0607	1.59 GPH	6 LPH	**PEU483931MEA**
0710	1.85 GPH	7 LPH	**PEU483941MEA**
1012	2.64 GPH	10 LPH	**PEU483951MEA**
1505	3.96 GPH	15 LPH	**PEU483961MEA**

120 V, 60 Hz

ETATRON

Dilution Solutions • 2090 Sunnydale Blvd. • Clearwater, FL, USA
1-800-451-6628 • 1-727-451-1198
www.dilutionsolutions.com

eOne MF

Smaller Capacity Pumps

120-230 V / 50-60 Hz

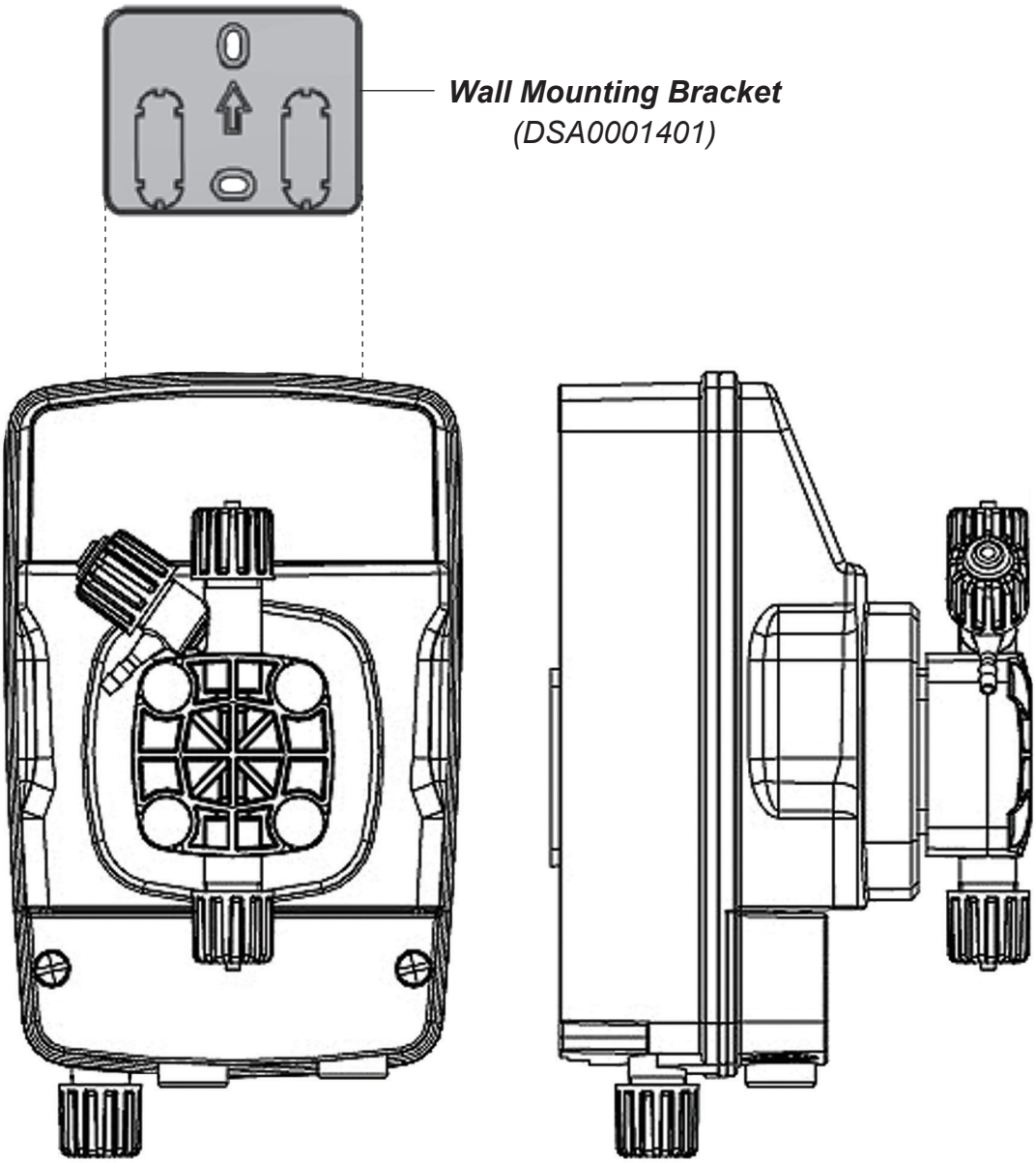

eOne MF Front View ***eOne MF Lateral View***

eOne MF

Smaller Capacity Pumps

120-230 V / 50-60 Hz

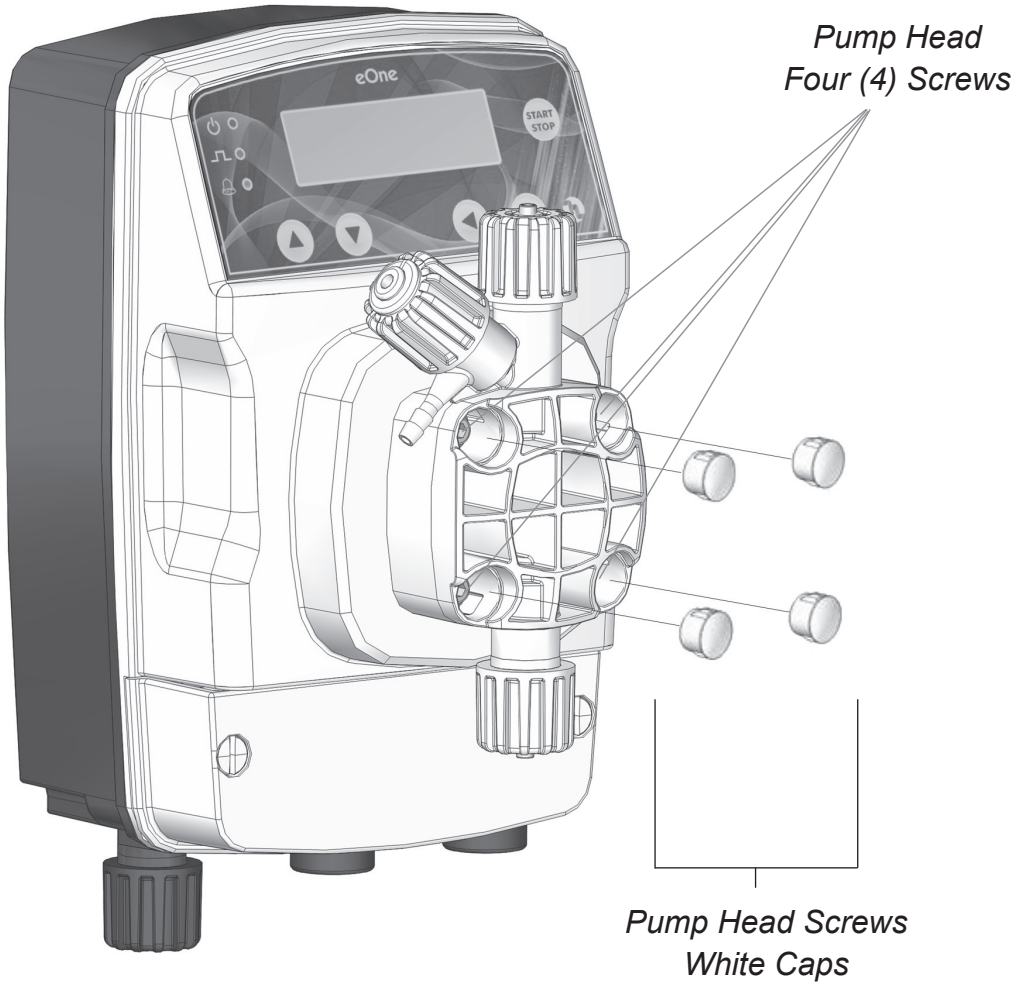

eOne MF

Smaller Capacity Pumps

120-230 V / 50-60 Hz

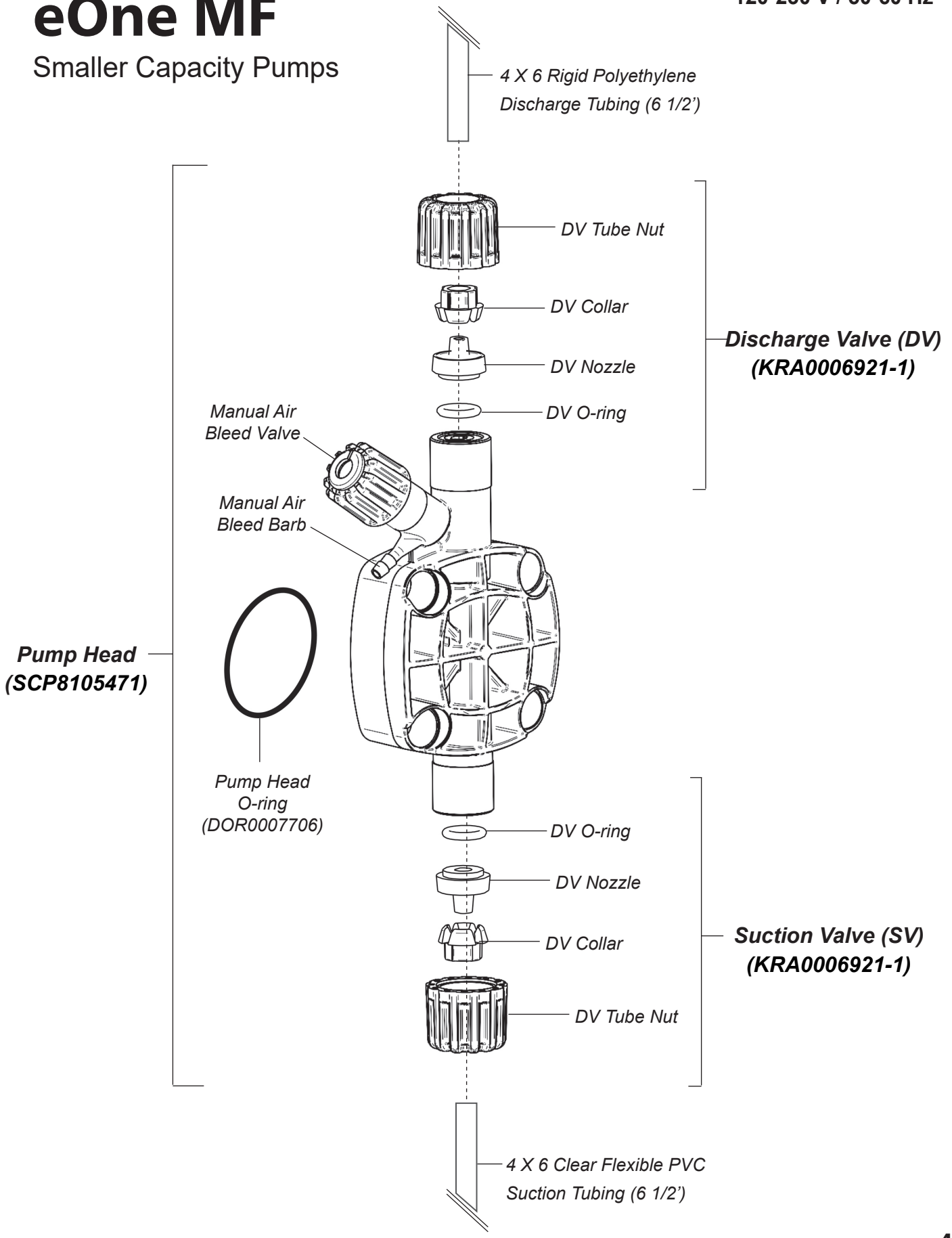

eOne MF

Smaller Capacity Pumps

120-230 V / 50-60 Hz

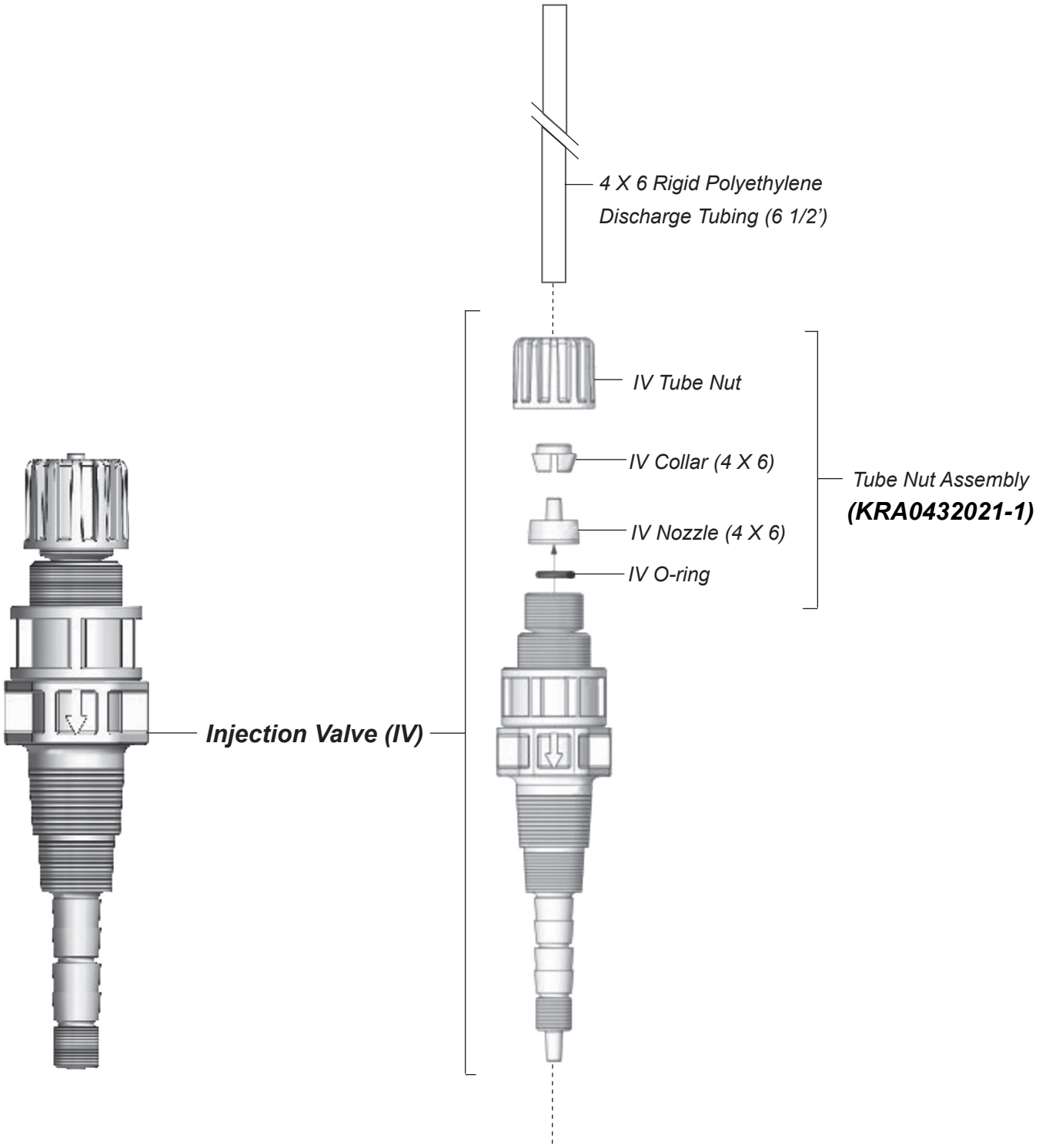

eOne MF

120-230 V / 50-60 Hz

Smaller Capacity Pumps

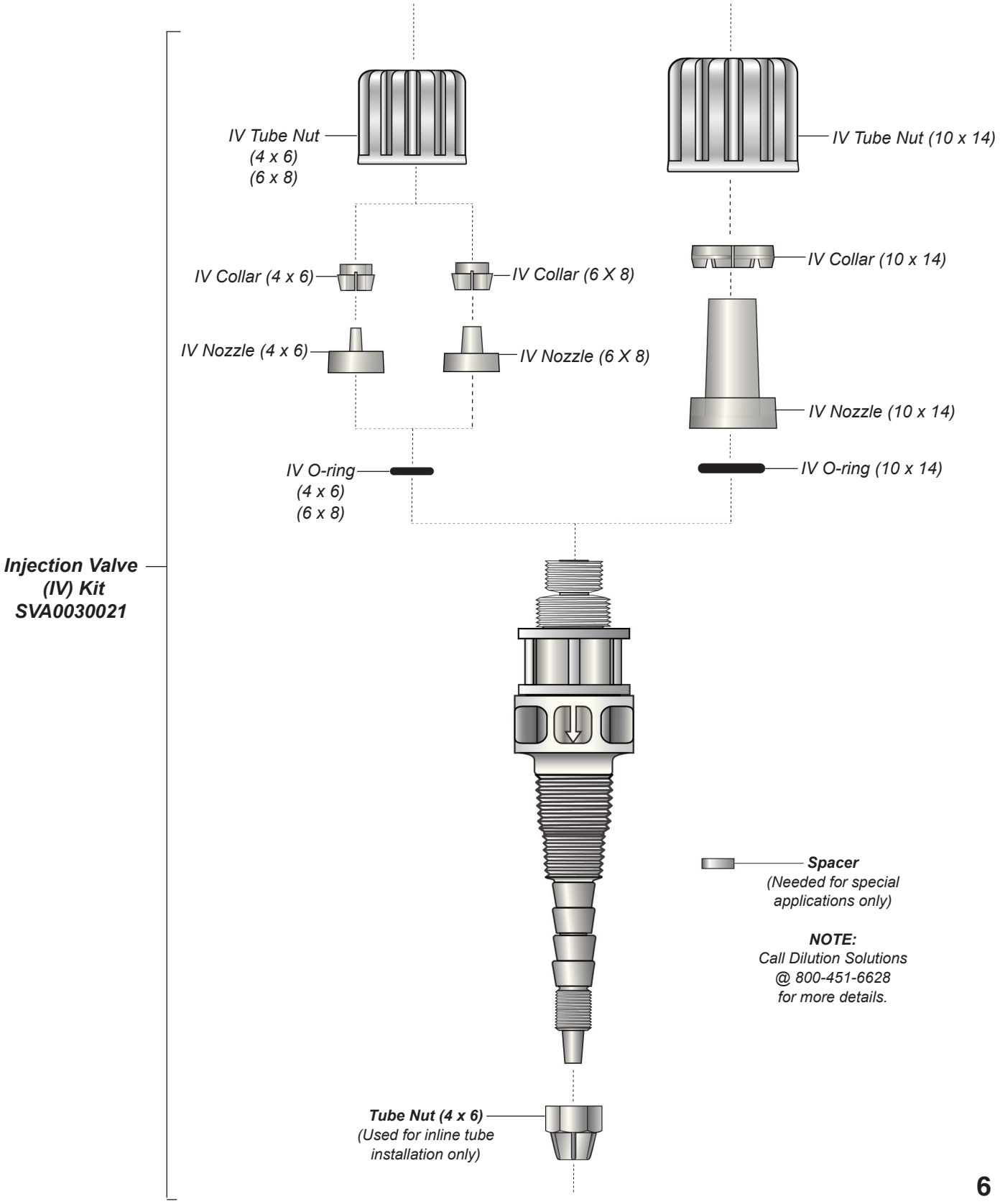

eOne MF

Smaller Capacity Pumps

120-230 V / 50-60 Hz

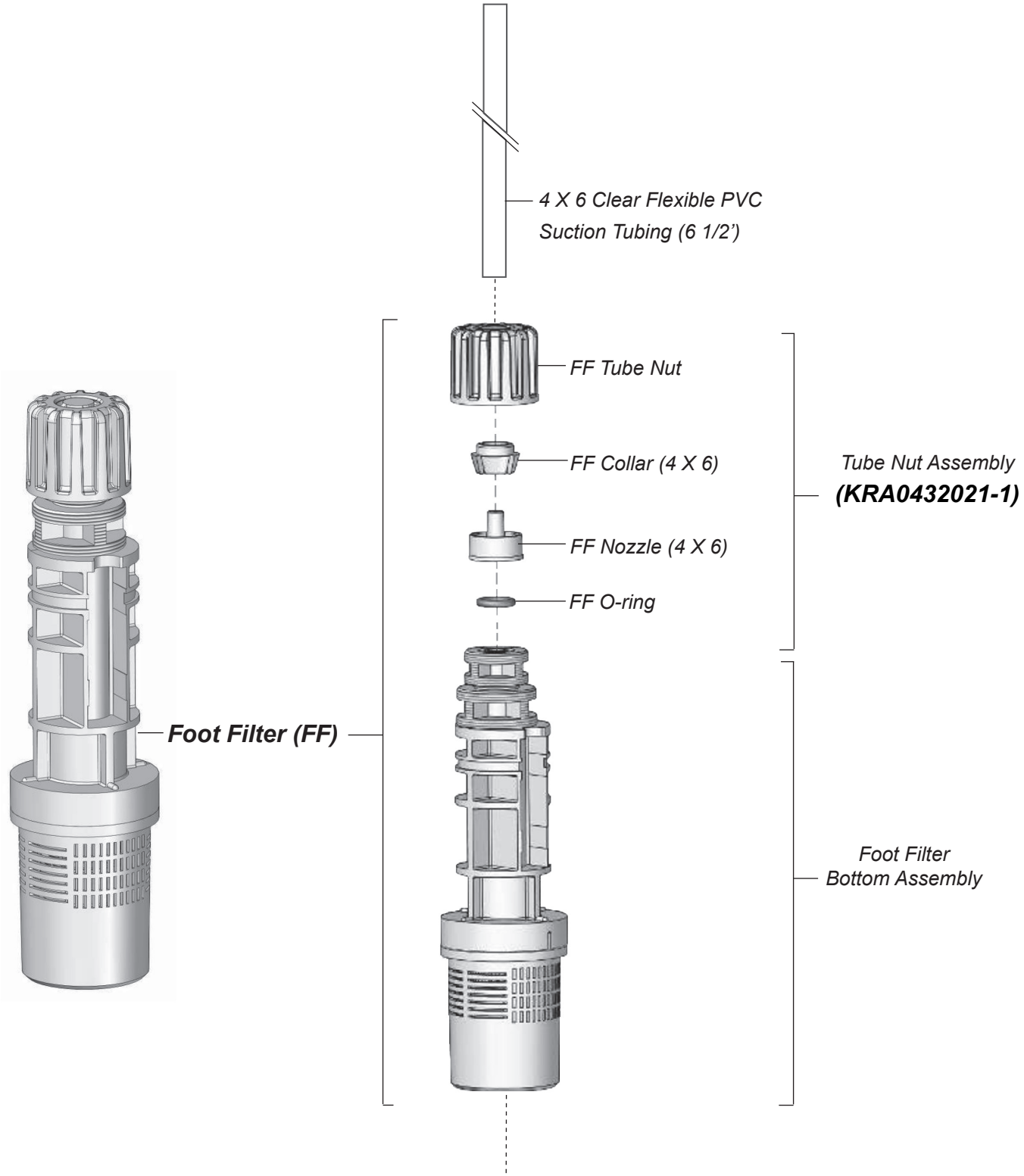

eOne MF

Smaller Capacity Pumps

120-230 V / 50-60 Hz

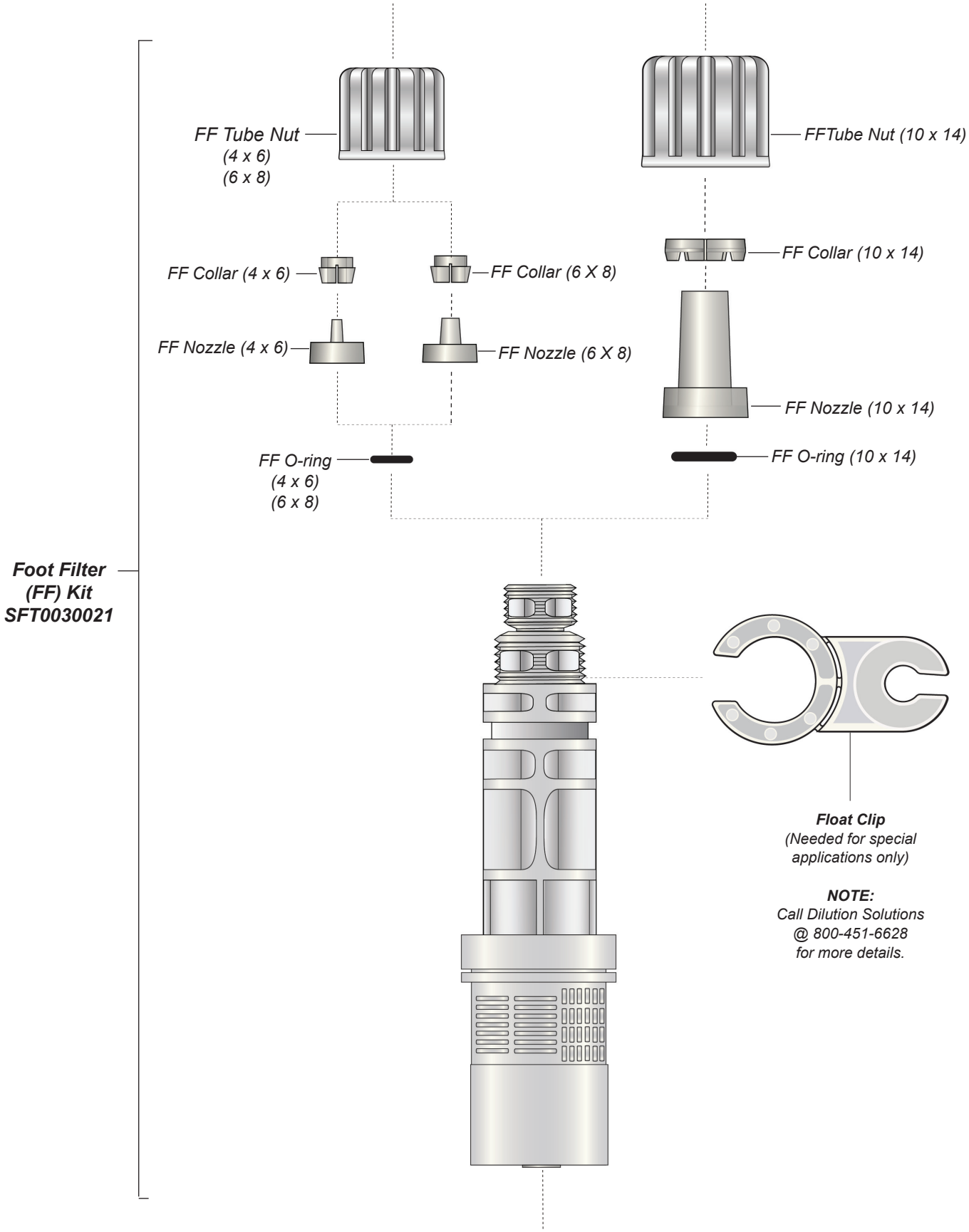

eOne MF

Smaller Capacity Pumps

120-230 V / 50-60 Hz

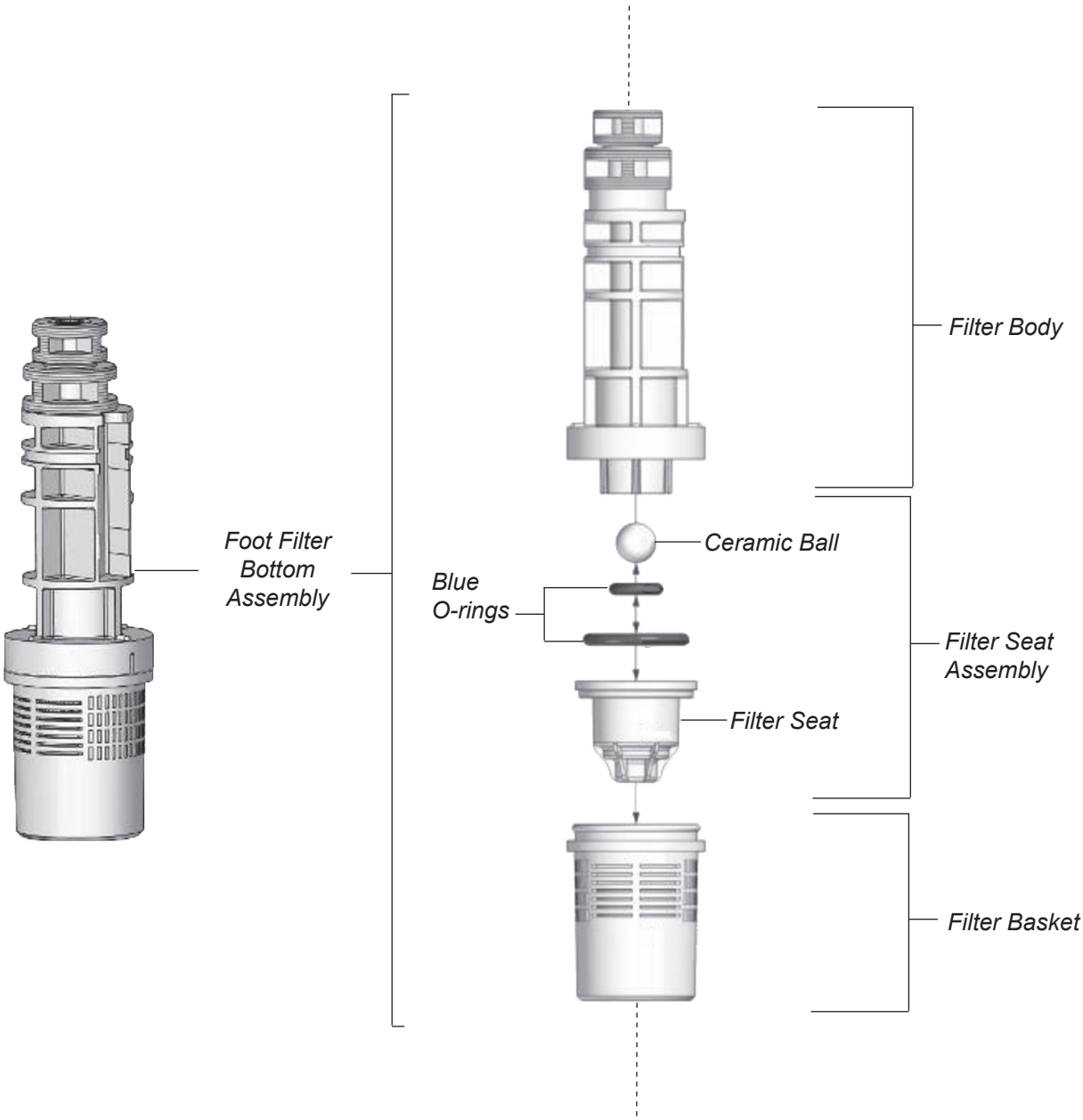

eOne MF

120-230 V / 50-60 Hz

Smaller Capacity Pumps

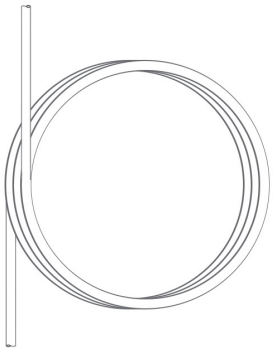

4 X 6 Clear Flexible PVC Bleed Off Tubing (6 1/2')

Injection Valve

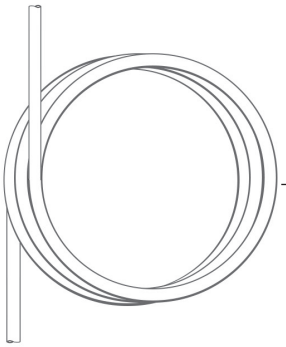

4 X 6 Rigid Polyethylene Discharge Tubing (6 1/2')

Tubing Kit ***(SCO0030022)***

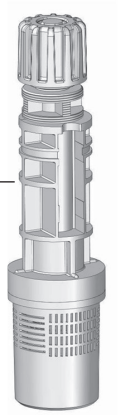

Foot Filter

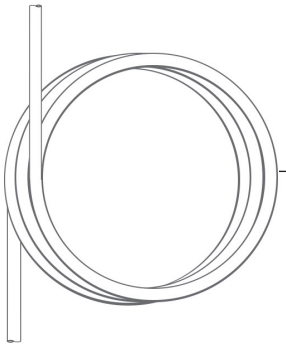

4 X 6 Clear Flexible PVC Suction Tubing (6 1/2')

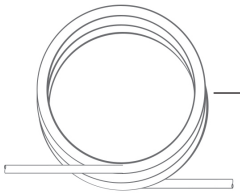

BULK TUBING LENGTHS AVAILABLE

6 1/2' (2 mts) 4 X 6 mm Polyethylene Discharge tubing per foot - ***Part # 2003021-1***

6 1/2' (2 mts) 4 X 6 mm PVC Suction tubing per foot - ***Part # DUT0000006-1***

6 1/2' (2 mts) 4 X 6 mm PVC Bleed Off tubing per foot - ***Part # DUT0000006-1***